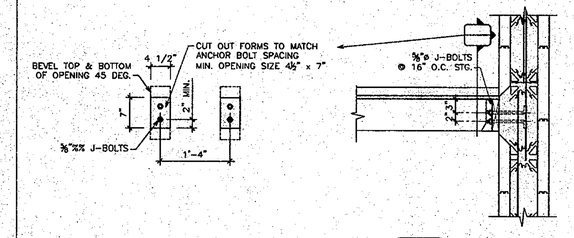

4 / S4.2 SECTION
3/4" = 1'-0"

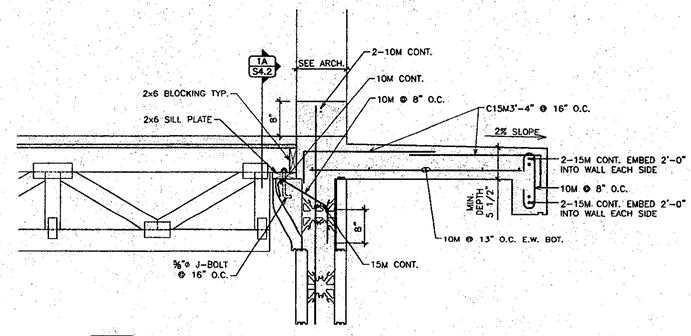

3 / S4.2 TYPICAL SECTION AT BALCONY LOCATIONS
3/4" = 1'-0"

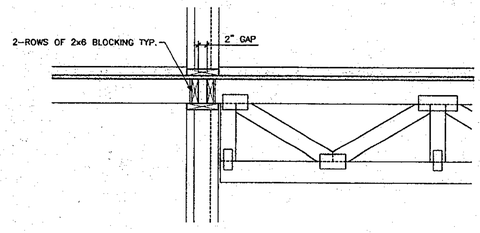

2 / S4.2 SECTION
3/4" = 1'-0"

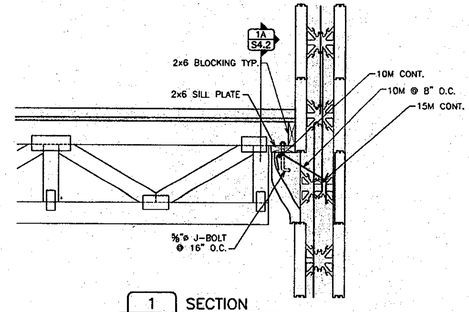

1 / S4.2 SECTION
3/4" = 1'-0"

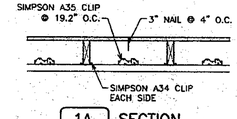

1A / S4.2 SECTION
3/4" = 1'-0"

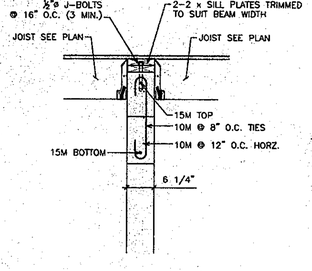

8 / S4.2 SECTION
3/4" = 1'-0"

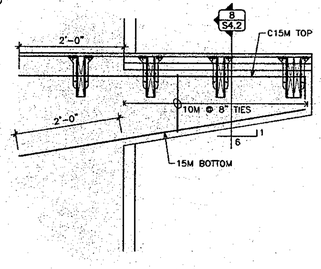

7 / S4.2 SECTION
3/4" = 1'-0"

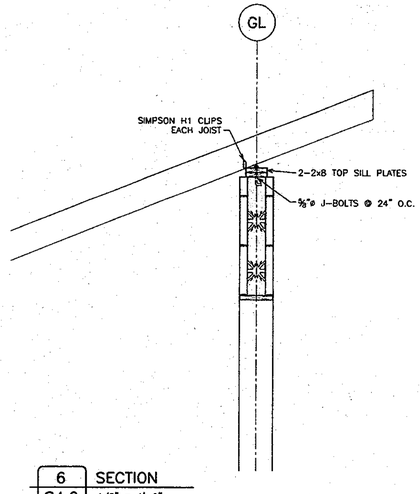

6 / S4.2 SECTION
1/2" = 1'-0"

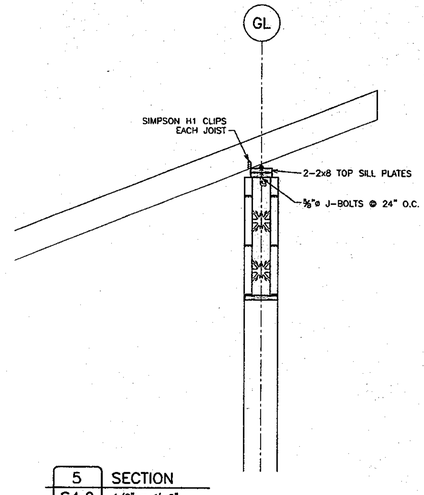

5 / S4.2 SECTION
1/2" = 1'-0"

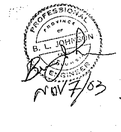

DO NOT BUILD FROM THIS DRAWING UNLESS IT HAS BEEN MARKED "ISSUED FOR CONSTRUCTION" AND SIGNED BY THE ENGINEER IN THE ABOVE COLUMN.

NO.	REVISION	DATE	BY
1	ISSUED FOR BUILDING PERMIT	OCT 07 03	

All drawings, plans, models, designs, specifications and other documents prepared by Read Jones Christoffersen Ltd. ("R.J.C.") and used in connection with this project are instruments of service for the work shown in them (the "Work") and as such are and remain the property of R.J.C. whether the Work is executed or not, and R.J.C. reserves the copyright in them and in the Work executed from them, and they shall not be used for any other work or project.

These drawings are "design drawings" only. The work "as constructed" may vary from what is shown on these drawings.

READ JONES CHRISTOFFERSEN LTD.
VANCOUVER VICTORIA NANAIMO CALGARY EDMONTON TORONTO
220 - 645 FORT ROAD, VICTORIA, B.C. V8V 6E0 TEL 250-381-7551 FAX 250-381-7552
EMAIL: rjc@rjc.ca WEBSITE: www.rjc.ca

Nicholas Bawlf
Architect
642 Battery Street,
Victoria, BC, V8V 1E5
phone / fax : 250) 384 6071
e-mail : nbawlf@shaw.ca

The Wing
Proposed Multi Family Residential Development
105 & 109 Wilson Street
Victoria, B.C.

SHEET TITLE: SECTIONS

DESIGN	W.G.	SHEET NO.	S4.2
DRAWN	K.G.		
PROJECT	2034-01	OF	